# INSTRUCTION

## SOH LED IP40 3743

REGIOLUX

Regiolux GmbH
Hellinger Str. 3
D-97486 Königsberg/Bay.
T 09525 89-0
http://www.regiolux.de
info@regiolux.de

**Achtung:**
Leuchte nicht öffnen!
Garantieverlust!

**Attention:**
Don't open the luminare!
Loss of Guarantee!

**Attention:**
N'est pas ouvrir le luminare!
Perte de garantie!

**Atención:**
Non abrir la luminara!
Pérdida de garantia!

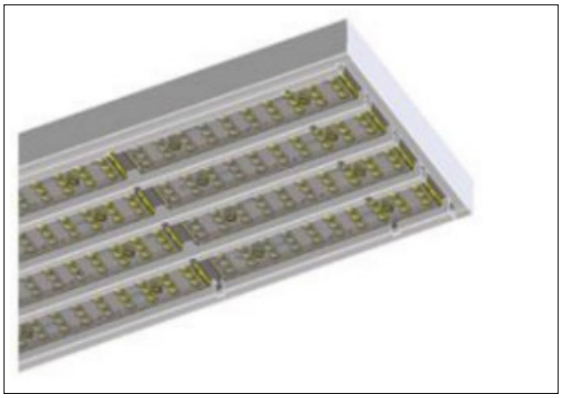

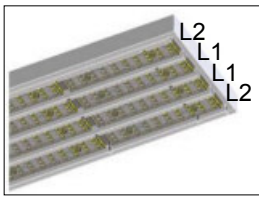


**SOH /1300**

nur bei ET
only ET
seulement ET

| | | |
|---|---|---|
| ET | braun/brown | = L1 |
| | schwarz/black | = L2 |
| | blau/blue | = N |
| | grau/grey | = ---- |
| DALI | braun/brown | = L |
| | blau/blue | = N |
| | schwarz/black | = DALI |
| | grau/grey | = DALI |

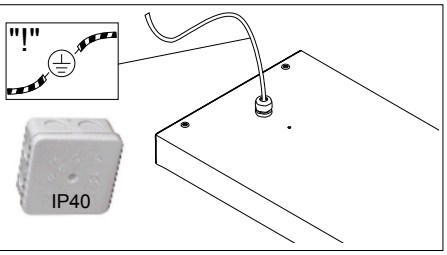


**DW 235/80**
37290001100

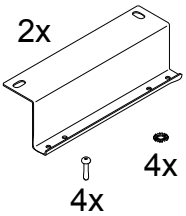


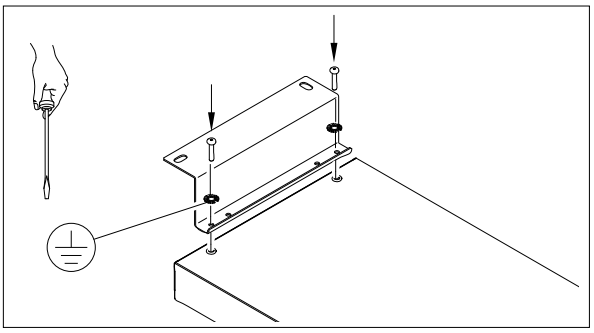

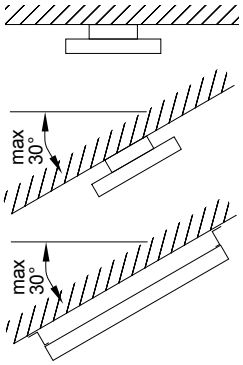


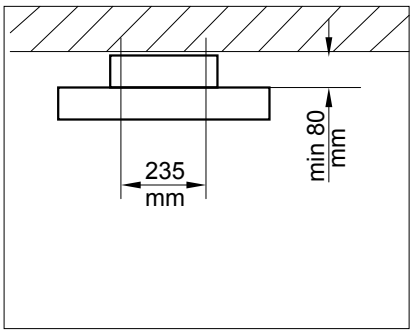


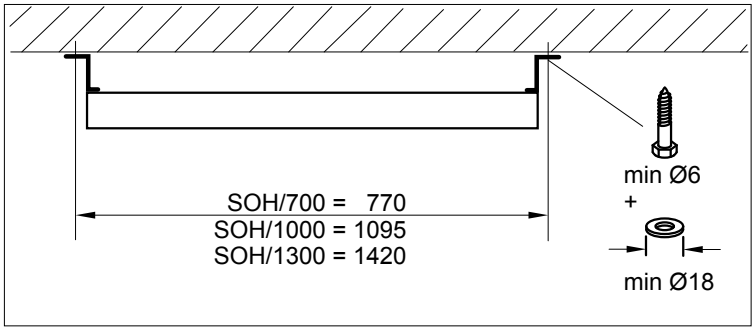


**DW 235/30°**
37290006100

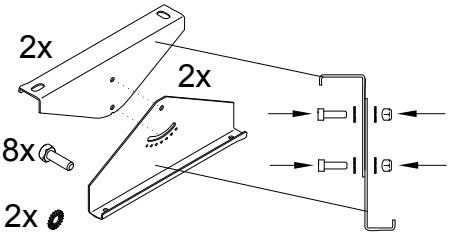


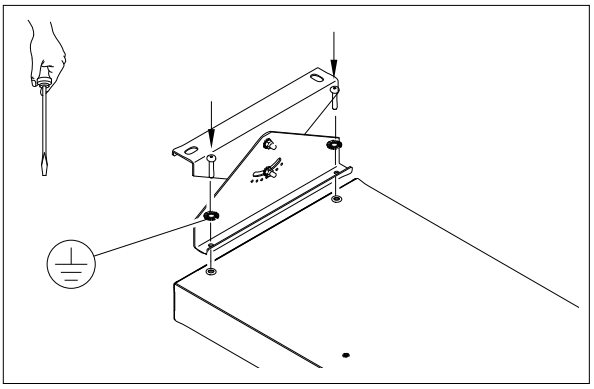

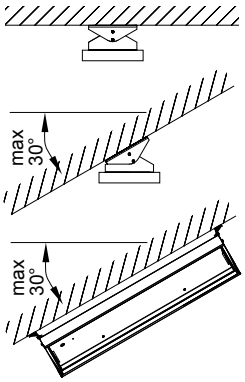


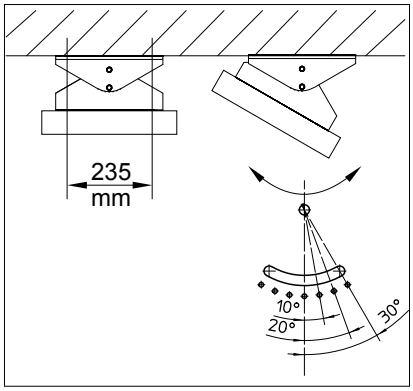


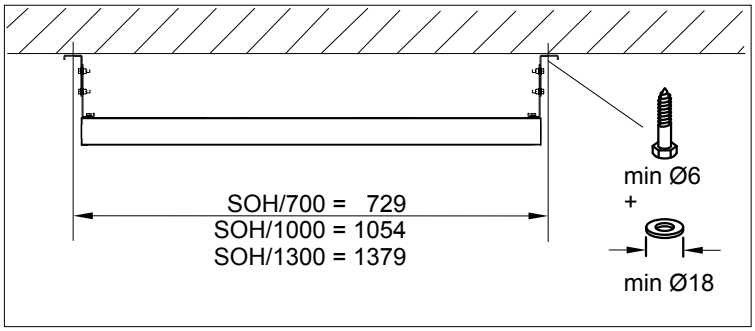


Art-Nr.: 532086 - 10/19 - Blatt1

# INSTRUCTION

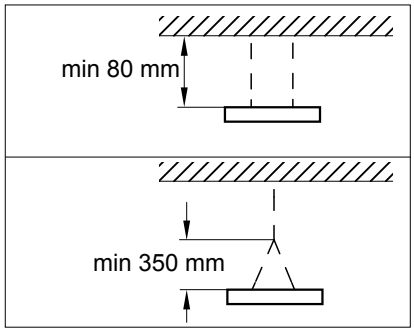


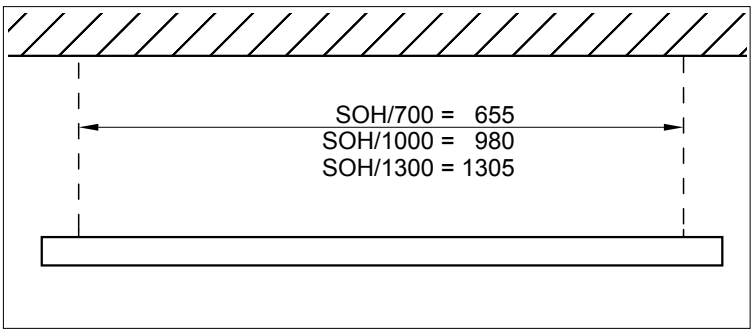


**KKH 4**
37290004100

4x
M6x30

4x

4x

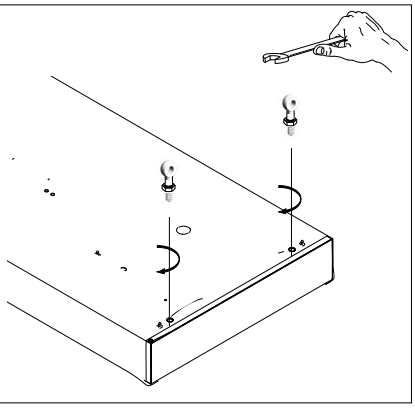

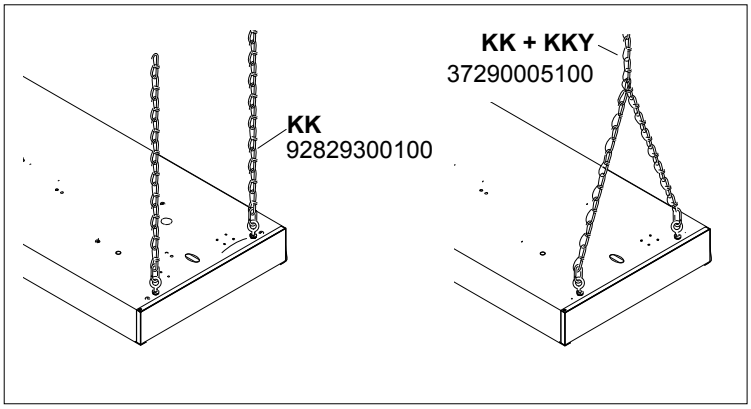


Option

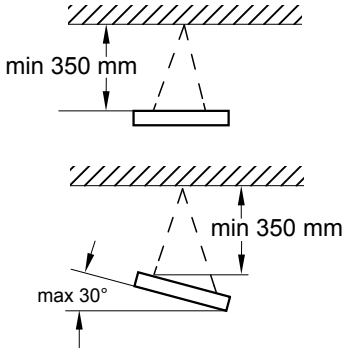


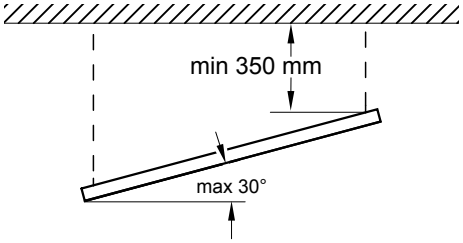


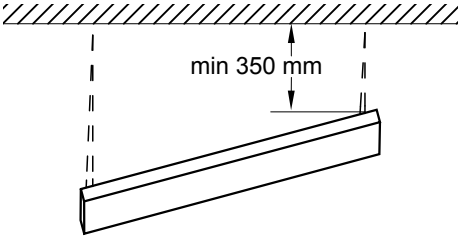


Art-Nr.: 532086 - 10/19 - Blatt1

# INSTRUCTION

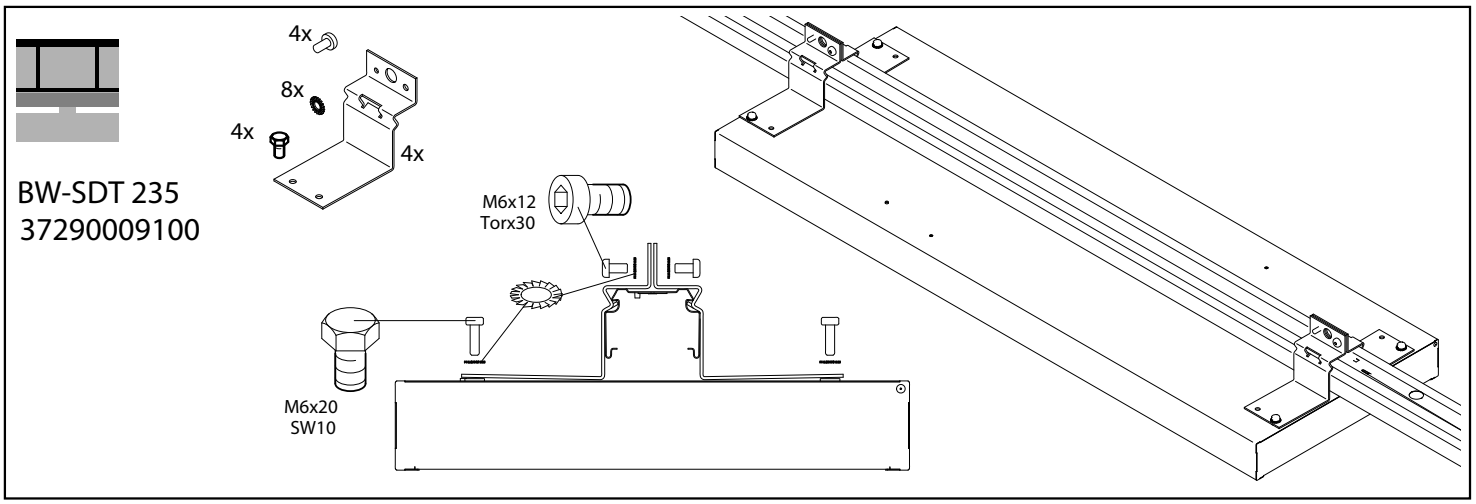


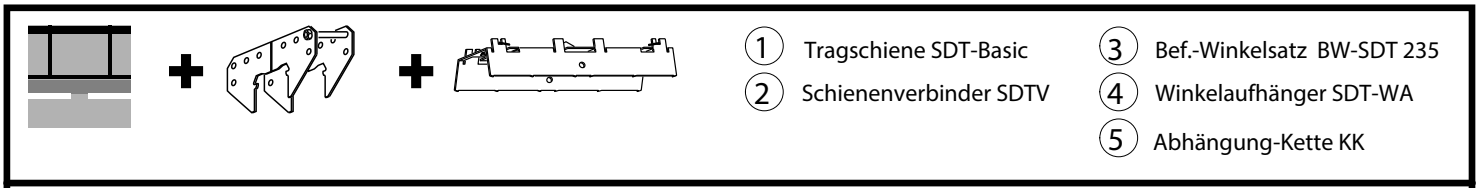


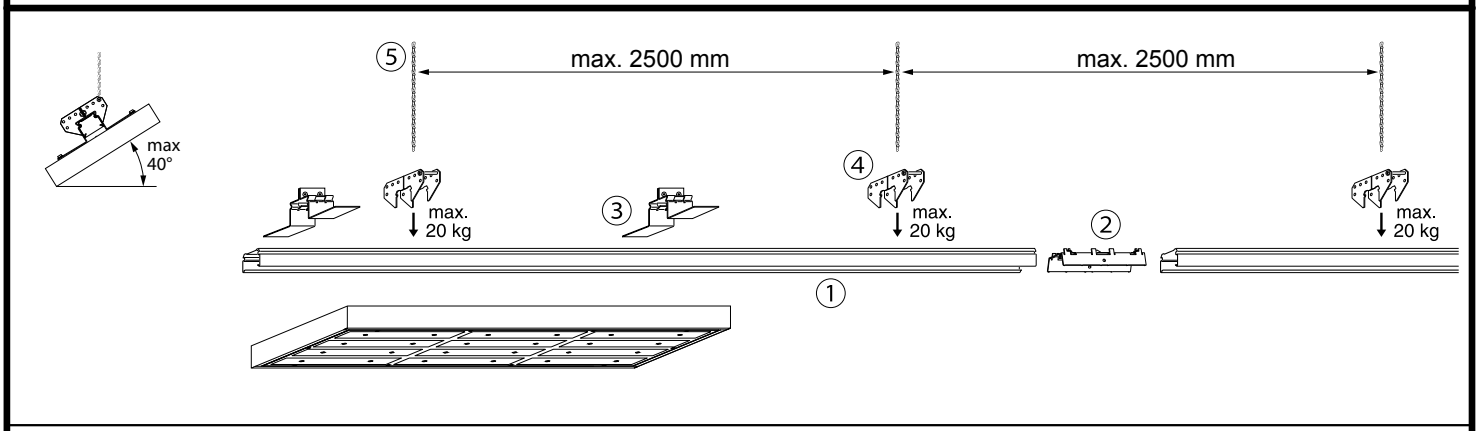


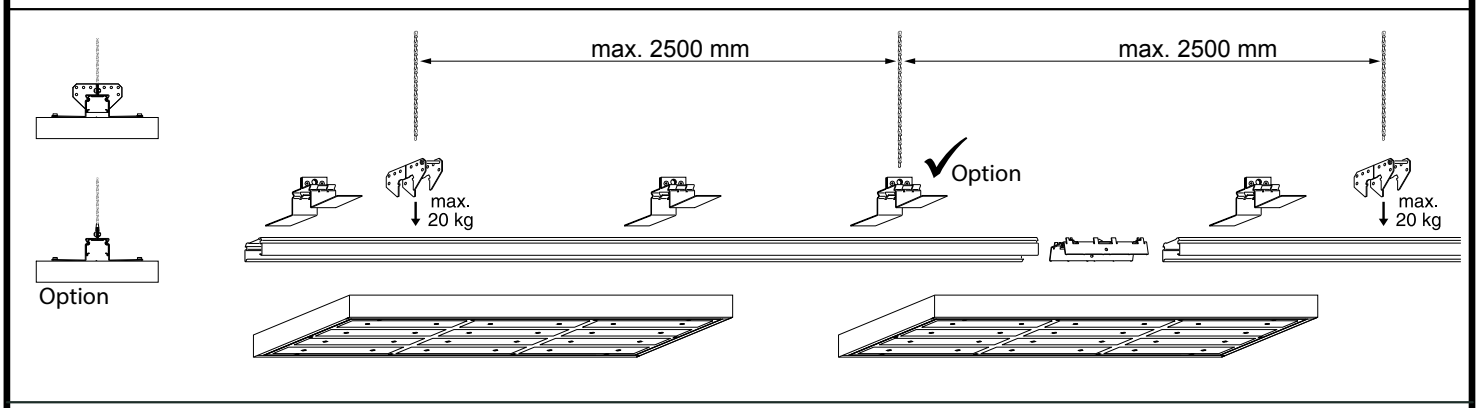


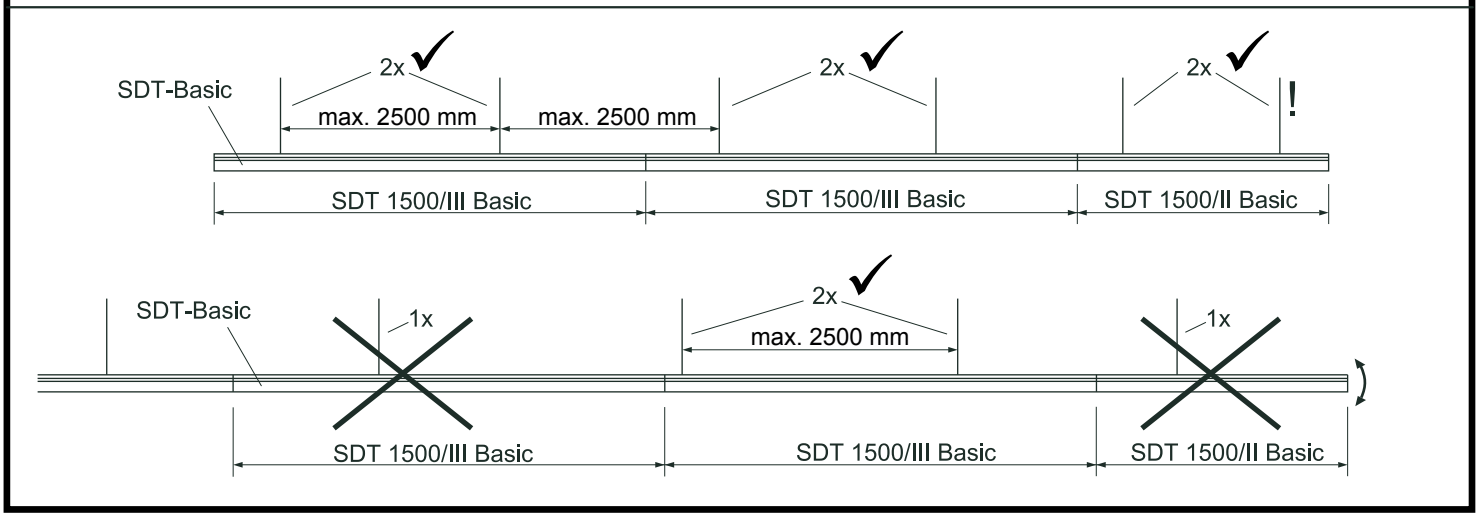


Art-Nr.: 532086 - 10/19 - Blatt 2

1 Tragschiene SDT-Basic

2 Schienenverbinder SDT-AP

3 Bef.-Winkelsatz BW-SDT 235

4 Winkelaufhänger SDT-WA

5 Abhängung-Kette KK

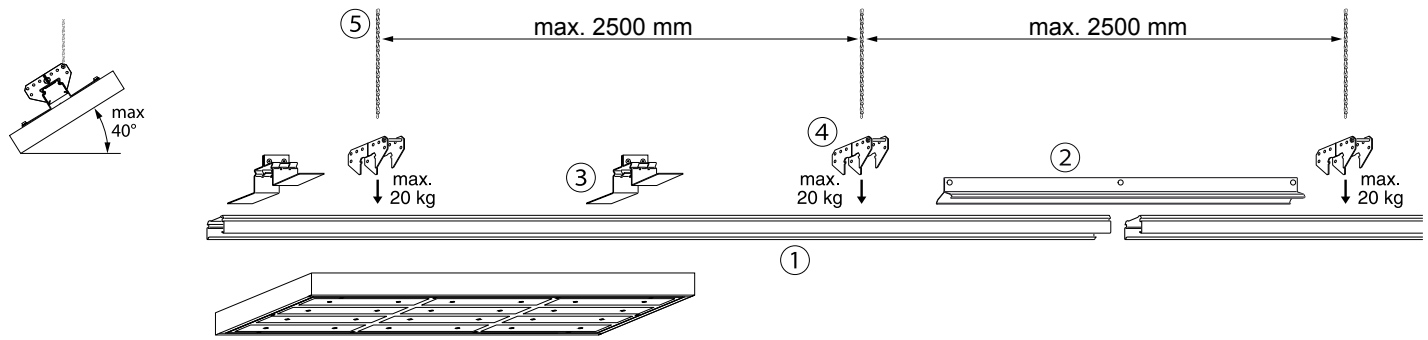


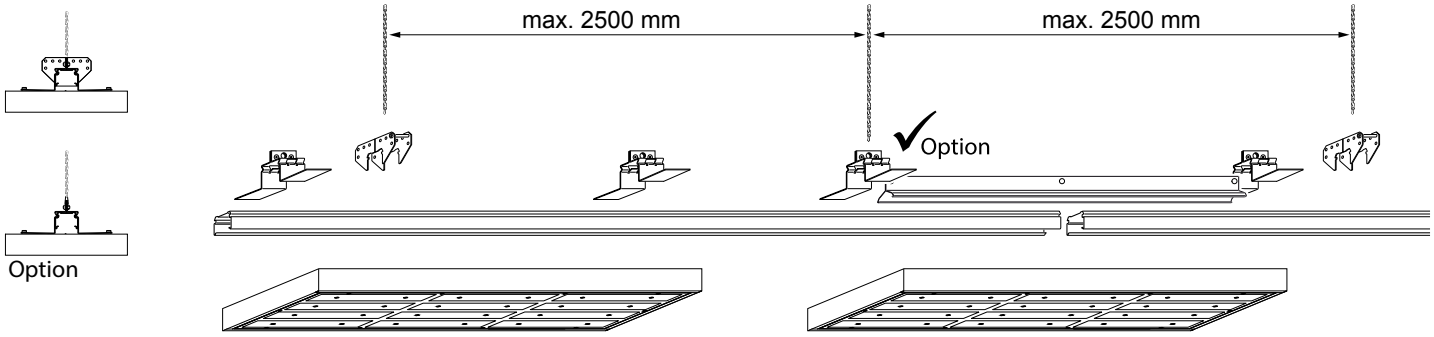


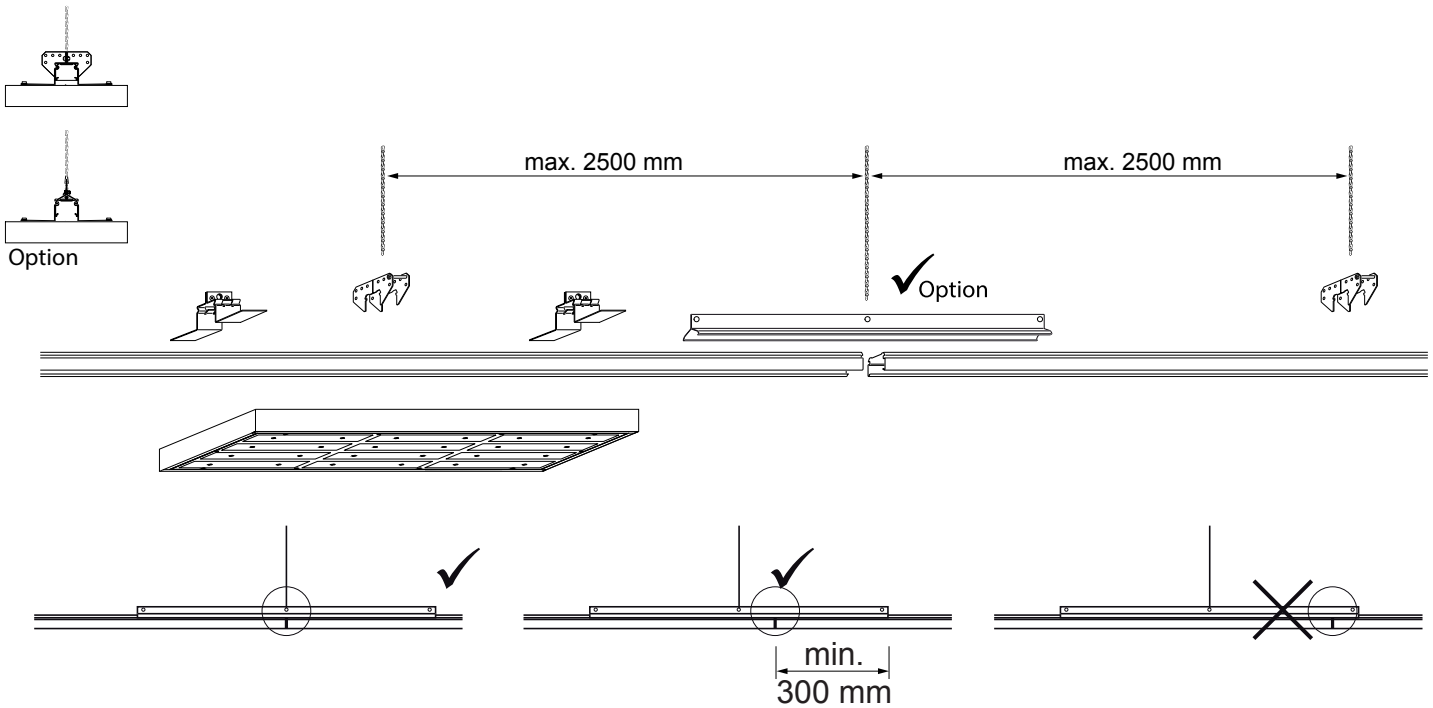


Art-Nr.: 532086 - 10/19 - Blatt 2

REGIOLUX

## EU Konformitätserklärung

Hersteller:
**Regiolux GmbH**
Anschrift:
**Hellinger Strasse 3 D-97486 Königsberg**
Monat/Jahr:
**2 / 2020**
Produktbezeichnung

## *EC Declaration of Conformity*

Manufacturer:
**Regiolux GmbH**
*Address:*
**Hellinger Strasse 3 D-97486 Königsberg**
*Month/year:*
**2 / 2020**
*Product description*

**37430116610 SOHB/0700 LED 10500 840 DALI IP40**
**37430226610 SOHB/1000 LED 21900 840 DALI IP40**
**37430226630 SOHTB/1000 LED 21900 840 DALI IP40**

Funkmodul / radio module

**211802 KON-DA PHI-XIT100/250-700**

Diese Erklärung bescheinigt die Übereinstimmung mit den genannten Richtlinien, beinhaltet jedoch keine Zusicherung von Eigenschaften. Das bezeichnete Produkt stimmt bei bestimmungsgemäßer Anwendung mit den momentan geltenden Vorschriften folgender europäischer Richtlinien überein:

*This declaration certifies the conformity with the above mentioned directives, however does not include any promise of characteristics. The designated products correspond to the actually valid regulations of the following European directives:*

**EG- bzw. EU-Richtlinien**

Radio Equipment Richtlinie (RED) 2014/53/EU
Ökodesign-Richtlinie 2009/125/EG+EG 245/2009+EG 347/2010
RoHS-Richtlinie 2011/65/EU

***EC or EU directives***

*Radio Equipment Directive (RED) 2014/53/EU*
*Eco-Design Guideline 2009/125/EC+EC 245/2009+EC 347/2010*
*RoHS guideline 2011/65/EU*

**Europäische bzw. nationale Normung**

**2014/53/EU geprüft nach:**

| | |
|---|---|
| EN 60 598-1:2015+B1:2016 | VDE 0711 Teil 1:2015-10+B1:2016-04 |
| EN 60 598-2-1:1989 | VDE 0711 Teil 201:1991-09 |
| | VDE 0710 Teil 13:1981-05 |
| EN 62471:2008 RG ≤ 1 | VDE 0837 Teil 471:2009-03 |
| EN 62493:2015 | VDE 0848 Teil 493:2016-08 |
| EN 61 547:2009 | VDE 0875 Teil 15-2:2010-03+B1:2010-07 |
| EN 55 015:2013+A1:2015 | VDE 0875 Teil 15-1:2016-04 |
| EN 61 000-3-2:2014 | VDE 0838 Teil 2:2015-03 |
| EN 61 000-3-3:2013 | VDE 0838 Teil 3:2014-03 |

***European or national standardization***

***2014/53/EEC tested as per:***

| | |
|---|---|
| *EN 60 598-1:2015+B1:2016* | *VDE 0711 part 1:2015-10+B1:2016-04* |
| *EN 60 598-2-1:1989* | *VDE 0711 part 201:1991-09* |
| | *VDE 0710 part 13:1981-05* |
| *EN 62471:2008 RG ≤ 1* | *VDE 0837 part 471:2009-03* |
| *EN 62493:2015* | *VDE 0848 part 493:2016-08* |
| *EN 61 547:2009* | *VDE 0875 part 15-2:2010-03+B1:2010-07* |
| *EN 55 015:2013+A1:2015* | *VDE 0875 part 15-1:2016-04* |
| *EN 61 000-3-2:2014* | *VDE 0838 part 2:2015-03* |
| *EN 61 000-3-3:2013* | *VDE 0838 part 3:2014-03* |

**Die Übereinstimmung der Vorgaben des Funkmoduls / der Funkkomponenten sind gegeben. Die CE Erklärung dieser Funkkomponenten sind ein Teil dieser CE Erklärung**

***The radio module/components complies/comply with the specifications. The CE declarations for these radio components are a part of this CE declaration.***

**Anbringung der CE-Kennzeichnung nach der RED-Richtlinie, RoHS-Richtlinie und Richtlinie über Ökodesign: JA**

***Labelling with the CE-mark according to the RED guideline and the RoHS guideline and guideline over Eco Design: YES***

Ort, Datum:
Königsberg, 24.2.2020

*Place, Date:*
Königsberg, 24.2.2020

Petra Polster
Geschäftsführerin / General Manager

i.V. Tobias Schiebold
Leiter Labor / Head of Laboratory

Regiolux GmbH
Hellinger Straße 3
D 97486 Königsberg

T +49 (0) 9525 89 0
F +49 (0) 9525 89 7
http://www.regiolux.de
e-mail: info@regiolux.de

Geschäftsführer/General Manager
Petra Polster

Gerichtsstand
Amtsgericht Haßfurt Main
Registergericht Bamberg HRB 54

*Place of Jurisdiction*
*Local Court Haßfurt Main*
*Register court Bamberg HRB 54*

Signify

Art.-Nr.: 532484 - 02/20

To: Whom it may concern

CC:

**Signify Netherlands B.V.**
**High Tech Campus 48**
**5656 AE Eindhoven**
**The Netherlands**

Ref: 2019G036

Subject: EU Conformity statement Xitanium LED drivers with NFC programming

Date: 2019-04-09

# EU Conformity Statement

| | |
|---|---|
| **Product Range:** | **NAME: Xitanium drivers with NFC** |
| **Product Code:** | See for Unique product ID number of all products under the family described above the Annex: Specification off the products |

**With these terms it is declared that the designated products are in conformity with the following Union harmonization legislation, LVD 2014/35/EU, EMC-D, 2414/30/EU, RE-D 2014/53/EU, ErP 2009/125/EC and RoHS 2011/65/EU and with the applicable requirements of the harmonized standards and technical specifications:**

**Low Voltage Directive (LVD), 2014/35/EU**

- EN 61347-1:2008+A1:2011+A2:2013
- EN 61347-2-13:2014

**Electromagnetic compatibility Directive (EMC), 2014/30/EU**

- EN 55015:2013+A1:2015
- EN 61000-3-2:2014
- EN 61000-3-3:2013
- EN 61547:2009

**Radio Equipment Directive (RE-D), 2014/53/EU**

- ETSI EN 301-489-1 v1.9.2
- ETSI EN 301 489-3 v1.6.1
- ETSI EN 300 330-1 v2.1.1

**EcoDesign requirements for energy-related products Directive (ErP), 2009/125/EC and applicable Implementing Measures**

- Implementing Measure EU/1194/2012

**Restriction of the use of certain Hazardous Substances in electrical and electronic equipment Directive (RoHS), 2011/65/EU**

- EN 50581:2012

2019-04-09

**Ms C Sweegers**
**Regulatory Affairs Manager LED Electronics**

signify

Ref:2019G036

Annex A: Specification of products

| Product ID (12nc) | Product description |
|---|---|
| 929000993106 | Xitanium 35W 0.08-0.35A 150V TD16 230V |
| 929000993206 | Xitanium 60W 0.08-0.35A 300V TD16 230V |
| 929001503606 | XITANIUM 36W 0.3-1A 54V TD 230V |
| 929001503706 | Xitanium 75W 0.7-2.0A 54V TD 230V |
| 929001505006 | Xitanium 75W 0.7-2.0A 54V SR 230V |
| 929001506406 | Xitanium 35W 0.08-0.35A 150V S 230V |
| 929001506506 | Xitanium 60W 0.08-0.35A 300V S 230V |
| 929001506606 | Xitanium 100W 0.15-0.5A 300V iXt 230V |
| 929001506706 | Xitanium 150W 0.2-0.7A 300V iXt 230V |
| 929001509106 | Xitanium 60W 0.08-0.35A 220V S 230V |
| 929001516306 | Xitanium 36W 0.3-1A_54V SR 230V |
| 929001516406 | Xitanium 100W 0.15-0.5A 300V iXt TD 230V |
| 929001516506 | Xitanium 150W 0.2-0.7A 300V iXt TD 230V |
| 929001529506 | Xitanium 100W 0.25-0.7A 220V S 230V |
| 929001540406 | Xitanium 35W 0.08-0.35A 150V SR 230V |
| 929001540506 | Xitanium 60W 0.08-0.35A 220V SR 230V |
| 929001540606 | Xitanium 60W 0.08-0.35A 300V SR 230V |
| 929001540706 | Xitanium 100W 0.25-0.7A 220V SR 230V |
| 929001540806 | Xitanium 100W 0.15-0.5A 300V SR 230V iXt |
| 929001540906 | Xitanium 150W 0.2-0.7A 300V SR 230V iXt |
| 929001547206 | Xitanium 60W 0.08-0.35A 220V TD16 230V |
| 929001547306 | Xitanium 100W 0.25-0.7A 220V TD16 230V |
| 929001553406 | XI 100W 0.15-0.5A 300V iXt TDCL 230V |
| 929001553506 | XI 150W 0.2-0.7A 300V iXt TDCL 230V |
| 929001553706 | XI 60W 0.08-0.35A 300V TD16CL 230V |
| 929001557306 | Xitanium 35W 0.08-0.35A 150V S/16 230V |
| 929001557406 | Xitanium 60W 0.08-0.35A 300V S/16 230V |
| 929001557506 | Xitanium 60W 0.08-0.35A 220V S/16 230V |
| 929001571406 | Xitanium 36W 0.3 -1.05A 54V S 230V |
| 929001571506 | Xitanium 65W 0.5-1.4A 54V S 230V |
| 929001608406 | Xitanium 300W 0.5-1.4A 300V iXt TD 230V |
| 929001616006 | XI 60W 0.08-0.35A 300V TD16CL 230V |
| 929001627606 | Xitanium 60W 0.15-0.50A 220V TD11 230V |
| 929001627706 | Xitanium 35W 0.08-0.35A 220V TD11 230V |
| 929001685606 | Xitanium 100W 0.15-0.5A 300V iXt TD 230V |
| 929001685706 | Xitanium 150W 0.2-0.7A 300V iXt TD 230V |
| 929001616106 | XI 100W 0.15-0.5A 300V iXt TDCL 230V |
| 929001627406 | Xitanium 150W 0.2-0.7A 300V iXt TDCL 230 |
| 929000991706 | Xitanium 20W WH 0.15-0.5A 54V TD/Is 230V |
| 929000991806 | Xitanium 50W WH 0.7-1.5A 54V TD/Is 230V |
| 929000969906 | Xitanium 36W WH 0.3-1A 54V TD/Is 230V |
| 929001404306 | Xitanium 36W LH 0.3-1A 48V I 230V |
| 929000934706 | Xitanium 50W LH 0.7-1.5A 48V I 230V |
| 929000941306 | Xitanium 20W LH 0.15-0.5A 48V Is 230V |
| 929001415006 | Xitanium 20W/m 0.15-0.5A 54V 230V |
| 929001415106 | Xitanium 36W/m 0.3-1.05A 54V 230V |
| 929001415206 | Xitanium 43W/m 0.7-1.2A 54V 230V |
| 929001415306 | Xitanium 50W/m 0.7-1.5A 54V 230V |
| 929001413906 | Xitanium 20W WH 0.15-0.5A 54V Is |
| 929001414006 | Xitanium 36W WH 0.3-1.05A 54V Is |
| 929001416806 | Xitanium 50W WH 0.7-1.5A 54V Is |
| 929001558606 | Xitanium 40W/t 0.3-1A 54V TD 230V PCBA |

signify

Ref:2019G036

| | |
|---|---|
| 929001423606 | Xitanium 36W/m 0.3-1.05A 54V OffDiag 230V |
| 929001471006 | Xitanium 20W WH 0.15-0.5A 54V Is G2 |
| 929001471106 | Xitanium 36W WH 0.3-1.05A 54V Is G2 |
| 929001471206 | Xitanium 50W WH 0.7-1.5A 54V Is G2 |
| 929001485906 | Xitanium 20W/m 0.15-0.5A 54V 230V |
| 929001486006 | Xitanium 36W/m 0.3-1.05A 54V 230V |
| 929001486106 | Xitanium 43W/m 0.7-1.2A 54V 230V |
| 929001485106 | Xitanium 20W /m 0.15-0.5A 54V S TD 230V |
| 929001485206 | Xitanium 36W /m 0.3-1.05A 54V S TD 230V |
| 929001649806 | Xitanium 20W WH 0.15-0.5A 54V TD/Is CL 230V |
| 929001649706 | Xitanium 36W WH 0.3-1A 54V TD/Is CL 230V |
| 929001649906 | Xitanium 50W WH 0.7-1.5A 54V TD/Is CL 230V |
| 929001613506 | Xi SR 12W 0.2-0.7A SNEMP 230V C133 sXt |
| 929001598306 | Xi SR 22W 0.2-0.7A SNEMP 230V C133 sXt |
| 929001573706 | Xi SR 22W 0.3-1.0A SNEMP 230V C133 sXt |
| 929001573506 | Xi SR 40W 0.2-0.7A SNEMP 230V C133 sXt |
| 929001573606 | Xi SR 40W 0.3-1.0A SNEMP 230V C133 sXt |
| 929001507706 | Xi SR 75W 0.2-0.7A SNEMP 230V S240 sXt |
| 929001507806 | Xi SR 75W_0.3-1.0A SNEMP 230V S240 sXt |
| 929001623206 | Xi SR 75W 0.2-0.7A SNEMP 230V C150 sXt |
| 929001623306 | Xi SR 75W 0.3-1.0A SNEMP 230V C150 sXt |
| 929001623406 | Xi SR 110W 0.2-0.7A SNEMP 230V C150 sXt |
| 929001623506 | Xi SR 110W 0.3-1.0A SNEMP 230V C150 sXt |
| 929001507506 | Xi SR 150W 0.2-0.7A SNEMP 230V S240 sXt |
| 929001507606 | Xi SR 150W 0.3-1.0A SNEMP 230V S240 sXt |
| 929001663106 | Xi SR 165W 0.2-0.7A SNEMP 230V C170 sXt |
| 929001663206 | Xi SR 165W 0.3-1.0A SNEMP 230V C170 sXt |
| 929001617706 | Xi FP 22W 0.2-0.7A SNLDAE 230V C123 sXt |
| 929001518506 | Xi FP 22W 0.3-1.0A SNLDAE 230V C123 sXt |
| 929001518606 | Xi FP 40W 0.2-0.7A SNLDAE 230V C123 sXt |
| 929001518706 | Xi FP 40W 0.3-1.0A SNLDAE 230V C123 sXt |
| 929001617806 | Xi FP 22W 0.2-0.7A SNLDAE 230V S175 sXt |
| 929000991206 | Xi FP 22W 0.3-1.0A SNLDAE S175 230V sXt |
| 929000989206 | Xi FP 40W 0.2-0.7A SNLDAE S175 230V sXt |
| 929000989306 | Xi FP 40W 0.3-1.0A SNLDAE S175 230V sXt |
| 929001644006 | Xi FP 75W 0.2-0.7A SNLDAE 230V S240 sXt |
| 929001644106 | Xi FP 75W 0.3-1.0A SNLDAE 230V S240 sXt |
| 929001644206 | Xi FP 150W 0.2-0.7A SNLDAE 230V S240 sXt |
| 929001644306 | Xi FP 150W 0.3-1.0A SNLDAE 230V S240 sXt |
| 929000962406 | Xi FP 75W 0.2-0.7A SNLDAE 230V S240 sXt |
| 929000962506 | Xi FP 75W 0.3-1.0A SNLDAE 230V S240 sXt |
| 929000962206 | Xi FP 150W 0.2-0.7A SNLDAE 230V S240 sXt |
| 929000962306 | Xi FP 150W 0.3-1.0A SNLDAE 230V S240 sXt |
| 929001408406 | Xi FP 75W 0.2-0.7A SNLDAE 230V C133 sXt |
| 929001408506 | Xi FP 75W 0.3-1.0A SNLDAE 230V C133 sXt |
| 929001408606 | Xi FP 75W 1.0-1.5A SNLDAE 230V C133 sXt |
| 929001639006 | Xi FP 110W 0.2-0.7A SNLDAE 230V C133 sXt |
| 929001639106 | Xi FP 110W 0.3-1.0A SNLDAE 230V C133 sXt |
| 929001650006 | Xi FP 100W 0.2-0.7A SNLDAE 230V C165 sXt |
| 929001522006 | Xi FP 100W 0.2-0.7A SNLDAE 230V C165 sXt |
| 929000976206 | Xi FP 165W 0.2-0.7A SNLDAE 230V C170 sXt |
| 929000976306 | Xi FP 165W 0.3-1.0A SNLDAE 230V C170 sXt |
| 929001408306 | Xi FP 330W 2:0.2-0.7A SNDAE 230V C240 sXt |
| 929001627006 | Xi LP 22W 0.2-0.7A S1 230V C123 sXt |
| 929001532306 | Xi LP 22W 0.3-1.0A S1 230V C123 sXt |
| 929001537106 | Xi LP 40W 0.2-0.7A S1 230V C123 sXt |

signify

Ref:2019G036

| | |
|---|---|
| 929001532406 | Xi LP 40W 0.3-1.0A S1 230V C123 sXt |
| 929001613606 | Xi LP 22W 0.2-0.7A S1 230V S175 sXt |
| 929001613706 | Xi LP 22W 0.3-1.0A S1 230V S175 sXt |
| 929000930706 | Xi LP 40W 0.2-0.7A S1 230V S175 sXt |
| 929000940806 | Xi LP 40W 0.3-1.0A S1 230V S175 sXt |
| 929000964206 | Xi LP 70W 0.2-0.7A S1 230V C150 sXt |
| 929000964306 | Xi LP 70W 0.3-1.0A S1 230V C150 sXt |
| 929001654706 | Xi LP 75W 0.2-0.7A S1 230V C133 sXt |
| 929001654806 | Xi LP 75W 0.3-1.0A S1 230V C133 sXt |
| 929001654906 | Xi LP 75W 0.5-1.5A S1 230V C133 sXt |
| 929000963206 | Xi LP 75W 0.2-0.7A S1 230V S240 sXt |
| 929000963306 | Xi LP 75W 0.3-1.0A S1 230V S240 sXt |
| 929001597606 | Xi LP 75W 0.5-1.5A S1 230V S240 sXt |
| 929000964606 | Xi LP 110W 0.2-0.7A S1 230V C150 sXt |
| 929000964706 | Xi LP 110W 0.3-1.0A S1 230V C150 sXt |
| 929001655006 | Xi LP 110W 0.2-0.7A S1 230V C133 sXt |
| 929001655106 | Xi LP 110W 0.3-1.0A S1 230V C133 sXt |
| 929000962806 | Xi LP 150W 0.2-0.7A S1 230V S240 sXt |
| 929000962906 | Xi LP 150W 0.3-1.0A S1 230V S240 sXt |
| 929001553806 | Xi LP 150W 0.5-1.5A S1 230V S240 sXt |
| 929001535406 | Xi LP 165W 0.2-0.7A S1 230V C170 sXt |
| 929001535506 | Xi LP 165W 0.3-1.0A S1 230V C170 sXt |
| 929001571906 | Xi LP 165W 0.5-1.5A S1 230V C170 sXt |
| 929001657106 | Xi BP 12W 0.1-0.5A S 230V C100 |
| 929001499306 | Xi BP 22W 0.2-0.7A S 230V C123 sXt |
| 929001499406 | Xi BP 40W 0.2-0.7A S 230V C123 sXt |
| 929001499506 | Xi BP 40W 0.3-1.0A S 230V C123 sXt |

signify

Ref:2019G036

Annex B: Conformity statement

As a responsible company, Signify is committed to supply products that are compliant with relevant laws, rules and obligations imposed by relevant governmental bodies including sustainability.

In order to verify the safety and the performance of our products, it is our policy to strictly follow internationally recognized standards such as defined in IEC and/or ANSI and meet the requirements for applicable safety regulations, electro-magnetic immunity, ecodesign / performance, radio performance and environmental aspects.
Products sold within the European Economic Area (EEA) are subject to the mandatory conformity CE marking, declaring that the products meet the requirements of the applicable LVD (safety) / EMC or RE (radio equipment), Eco-design and RoHS directives and its harmonized standards, whenever the products are operated as stipulated in specification and design-in guides.

With the publication of the new Radio Equipment Directive (RE-D) 2014/53/EU, assessment has been done whether LED drivers with NFC functionality are considered Radio Equipment and fall into the scope of the RE-D.

As pointed out in section *1.6.3.14 RFID TAG* of the *RE-D guide* and ZVEI position paper *521_2018-0151_ZVEI_-_Die_Funkanlagen-Richtlinie_RE*, a driver with passive NFC* functionality is considered as a non-radio product which is RFID tagged. In this case, the internal RFID tag needs to comply with the essential requirements of the RE-D:

- Article 3.1a: The protection of Health and Safety as set out in 2014/35/EU
- Article 3.1b: An adequate level of Electromagnetic Compatibility as set out in 2014/30/EU
- Article 3.2 Efficient use of the radio spectrum to avoid harmful interference
- Article 3.3 Specific requirements (not applicable)

If the intended use is that the NFC tag can be accessed either during maintenance, then the NFC tag (and especially the reader) is in scope of the RE-D.

** passive means that in this case special form of RFID technology through the day (= passive NFC transmitter, consisting of an induction coil and an NFC chip) only one (from a reader or transmitter outgoing) signal is modulated and the day no transmit power provides.*

Recently, ZVEI has provided a *draft* position paper that the situation might be different for lighting products which can be influenced by the passive NFC tag after it has been placed on the market, for example consumer can change the configuration via the tag. In this case, the combination of lighting product and passive NFC tag might fall under the radio equipment directive.

Herewith, the assessment done with respect to Xitanium LED drivers with NFC tag.

Safety: The safety of the passive NFC transponder is tested as an integral part of the driver. The products are compliant with the essential requirements of the IEC/EN 61347-2-13 in conjunction with IEC/EN 61347-1.

signify

Ref:2019G036

EMC emission: RF-emissions during normal operation (Tag not activated) are assessed during the EN 55015 test of the driver. Because of the passive nature and low energy use of the NFC circuitry, there are no radiated emissions expected in the frequency range above 300 MHz yet this is validated in the EN 55015 test.

EMC immunity: Correct operation of the NFC function is checked during the EN 61547 test of the driver. Certain bands are excluded as defined in ETSI EN 301 489.
Additionally, tests have been performed on radiated / conducted immunity with the NFC Tag plus Reader on demo boards using test software set to continuous inventory cycles to check the read/write function. These tests have been performed according to the ETSI EN 301 489-3 v1.6.1 class 3. The results of the tests show that the equipment satisfied the regulations of the standards ETSI EN 301 489-3.

Spectrum: The amplitude modulation of the carrier and spurious emissions of the NFC circuitry (during activation) are covered by the spectrum test of the NFC scanner loaded with a typical passive NFC tag.
Additionally, the NFC tag plus Reader has been tested on demo boards against the ETSI EN 300 330-1 v2.1.1 9 KHz – 1 GHz. The test results have shown that the equipment satisfies the requirement of this regulation.

Please note that only limited harmonized standard - to provide a presumption of conformity with the essential requirements of the RE-D, have been published. Currently no harmonized standards with respect to Health & Safety and EMC are available. Therefore, currently listed harmonized standards under the 2014/35/EU (VD-safety) and 2014/30/EU (EMC) has been used.
The ETSI EN 301 489-3 v1.6.1 has been published under the RTT&E (previous directive for radio equipment) and used to check the radiated / conducted immunity of the NFC Tag with the Reader.
Standard ETSI EN 300 330 v2.1.1 ha been used to check the Radio Spectrum.

As shown above, the Xitanium Led drivers with NFC functionality (NFC circuitry / NFC tag) has been tested against the applicable harmonized standards as listed in Annex C.
In conclusion, the assessment above assures compliance of the NFC tag with the essential requirements of the RE-D.

If you have any other question regarding the compliance of our products, please do not hesitate to contact undersigned directly, or via your local Philips Lighting contact. We will be honored to assist you further.

Yours sincerely,

C. Sweegers
Regulatory Affairs Manager
LED Electronics / Lamp Electronics

signify

Ref:2019G036

Annex C: list harmonized standards used

| Low Voltage Directive (LVD), 2014/35/EU |
| --- |
| • EN 61347-1:2008+A1:2011+A2:2013<br>• EN 61347-2-13:2014 |

| Electromagnetic compatibility Directive (EMC), 2014/30/EU |
| --- |
| • EN 55015:2013+A1:2015<br>• EN 61000-3-2:2014<br>• EN 61000-3-3:2013<br>• EN 61547:2009 |

| Radio Equipment Directive (RE-D), 2014/53/EU |
| --- |
| • ETSI EN 301-489-1 v1.9.2<br>• ETSI EN 301 489-3 v1.6.1<br>• ETSI EN 300 330-1 v2.1.1 |

| EcoDesign requirements for energy-related products Directive (ErP), 2009/125/EC and applicable Implementing Measures |
| --- |
| • Implementing Measure EU/1194/2012 |

| Restriction of the use of certain Hazardous Substances in electrical and electronic equipment Directive (RoHS), 2011/65/EU |
| --- |
| • EN 50581:2012 |

Leitungsschutzschalter/Leuchten
Circuit breakers/luminaires

# worker / sportler

| | | 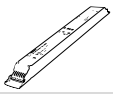 | | | |
|---|---|---|---|---|---|
| **WOH.**/700 ET | **SOH.**/700 ET | 1 | | ≤ 20 | 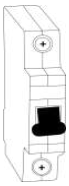 **C 16A** |
| **WOH.**/700 DALI | **SOH.**/700 DALI | 1 | | ≤ 20 | |
| | | | | | |
| **WOH.**/1000 ET | **SOH.**/1000 ET | 2 | | ≤ 12 | |
| **WOH.**/1000 DALI | **SOH.**/1000 DALI | 2 | | ≤ 18 | |
| | | | | | |
| **WOH.**/1300 ET | **SOH.**/1300 ET | 2 | | ≤ 10 | |
| **WOH.**/1300 DALI | **SOH.**/1300 DALI | 2 | | ≤ 10 | |

Bitte kontaktieren Sie den Technischen Service zum Ermitteln der für Sie optimalen Treiberkonfiguration.
Please contact the technical service to determine your optimal driver configuration.

Technischer Service:
Tel. 09525 89-260
Fax 09525 89-261
service@regiolux.de

**gültig für G2 ab 17.05.2018**

Änderungen vorbehalten / Subject to modifications

# LED

## Sicherheitshinweise (D)

### Allgemeine Sicherheitshinweise
- Montage, Inbetriebnahme und Wartung nur durch Elektrofachkraft.
- Arbeiten Sie nie bei anliegender Spannung an der Leuchte. Lebensgefahr durch Stromschlag!
- Elektrischer Anschluss muss ordnungsgemäß, entsprechend allen geltenden Normen und sonstigen nationalen und internationalen Sicherheits- und Unfallverhütungsvorschriften erfolgen.
- Beschädigte Leuchten dürfen nicht betrieben werden.
- Sicherheitshinweise und Montageanleitung beachten und aufbewahren
- Keine Haftung für Schäden durch unsachgemäßen Einsatz.
- Bei Instandsetzung nur Originalteile verwenden.
- Tragfähigkeit der Decke und Befestigungselemente sicherstellen.
- Leuchte ausschließlich für Innenraumeinsatz und Umgebungstemperaturen bis 25°C geeignet, sofern mittels Etikettierung der Leuchte nicht anders beschrieben.

### Betrieb der Leuchte
- Ungewöhnliche Dunkelstellen können auf Teilausfall von LED hinweisen. Regelmäßig prüfen und betroffene Leuchten austauschen. Die Lichtquelle (LED) dieser Leuchte darf nicht durch den Anwender ausgetauscht oder ersetzt werden.
- Eine Überschreitung der zulässigen Umgebungstemperatur reduziert die Lebensdauer der Leuchte, im Extremfall droht Frühausfall.
- Die Betauung der Leuchte ist zu vermeiden.
- Jegliche mechanische Belastung der LED Platinen ist unzulässig.
- LED können durch elektrostatische Entladung (ESD) geschädigt werden, bis hin zum Totalausfall. Direkte Berührung ist stets zu vermeiden.
- In Abhängigkeit von deren Konzentration können Chemikalien die LED-Module angreifen und zu Lichtstromreduktion, Drift der Lichtfarbe bzw. Totalausfall führen. Direkter Kontakt mit Säuren, Laugen, Lösemitteln, flüchtigen organischen Verbindungen bzw. Ölen ist stets zu vermeiden. Um Schäden durch Ausgasungen zu vermeiden, ist eine ausreichende Be- und Entlüftung zu gewährleisten.
- Zur Vermeidung von EMV-Problemen Durchgangsverdrahtung nicht unmittelbar entlang der Leuchtenverdrahtung führen.
- Steuereingänge von dimmbaren Leuchten mit handelsüblichen für Netzspannung geeigneten Leitungen anschließen.

### Änderungen unserer Produkte
Veränderung, Umarbeitung, Umkennzeichnung von Produkten können deren technische Eigenschaften negativ beeinflussen, diese zerstören und möglicherweise Folgeschäden an anderen Objekten verursachen. Für durch derartige Änderungen verursachte Schäden kann der Hersteller nicht verantwortlich gemacht werden.

+ IP5x - nicht leitfähiger Staub
+ IP6x - leitfähiger und nicht leitfähiger Staub

## Safety Information (GB)

### General Safety Information
- Installation, commissioning and maintenance only by qualified electrician.
- Never perform any work on the luminaire with voltage applied. Danger to life due to electric shock!
- Electric connection must be appropriate according to all applicable standards and other national and international safety and accident prevention regulations.
- Damaged luminaires must not be operated.
- Observe and retain safety instructions and mounting instructions
- No liability is accepted for damages resulting from improper use.
- Use genuine parts only for repair.
- Ensure stability of the ceiling and fastening elements.
- The luminaire is exclusively intended for interior rooms and ambient temperatures not exceeding 25°C, unless otherwise described by labeling the luminaire.

### Operation of the luminaire
- Abnormal dark spots may be an indication of partial failure of LEDs. Inspect regularly and replace the luminaires affected. The light source (LED) of this luminaire must not be exchanged or replaced by the user.
- Exceeding the permissible ambient temperature will reduce the luminaire's lifecycle, resulting in premature failure in extreme cases.
- Avoid condensation of the luminaire.
- Any mechanical load to the LED circuit boards is not permitted.
- LEDs can be damaged by electrostatic discharge (ESD). This may result in total failure. Always avoid direct contact.
- Depending on their concentration, chemicals can corrode the LED modules and lead to reduction of luminous flux, drift of luminous colour and/or total failure. Always avoid direct contact with acids, bases, solvents, volatile organic compounds and/or oils. Ensure sufficient ventilation to prevent damage by gas release.
- Avoid ESD problems by not routing feed-through wiring directly along the wiring of the luminaire.
- Connect control inputs of dimmable luminaires with standard cables suitable for power supply voltage.

### Changes to our products
Modification, reworking, re-marking of products can have a negative impact on their technical properties, destroy them and possibly cause consequential damage to other objects. The manufacturer cannot be held responsible for damage caused by such changes.

+ IP5x - dust nonconductive
+ IP6x - dust conductive and dust nonconductive

## Consignes de sécurité (F)

### Consignes générales de sécurité
- Montage, mise en service et maintenance uniquement par un électricien spécialisé.
- Ne travaillez jamais sur un luminaire sous tension. Danger de mort par choc électrique !
- Le branchement électrique doit être réalisé de manière correcte et conforme à toutes les normes en vigueur et autres prescriptions nationales et internationales relatives à la sécurité et à la prévention des accidents.
- Ne pas faire fonctionner de luminaires défectueux.
- Respecter et conserver les consignes de sécurité et les instructions de montage
- Nous déclinons toute responsabilité en cas de dommages dus à une utilisation incorrecte.
- Utiliser uniquement des pièces d'origine pour la réparation.
- Veiller à ce que la capacité portante du plafond et des éléments de fixation soit suffisante.
- Sauf indication contraire indiquée sur l'étiquette du luminaire, luminaire conçu uniquement pour une utilisation en intérieur et une température ambiante maximale de 25 °C.

### Fonctionnement du luminaire
- Des zones d'ombre inhabituelles peuvent indiquer une défaillance partielle des LED. Contrôler régulièrement et remplacer les luminaires concernés. Utilisateur n'est pas autorisé à échanger ou à remplacer la source de lumière (LED) de ce luminaire.
- Le dépassement des températures ambiantes admissibles réduit la longévité du luminaire; dans les cas extrêmes, cela peut entraîner des pannes prématurées.
- Éviter toute condensation sur le luminaire.
- Ne jamais soumettre les platines à LED à des charges mécaniques.
- Les décharges électrostatiques (DES) peuvent endommager les LED et entraîner leur destruction totale. Toujours éviter le contact direct.
- En fonction de leur concentration, les produits chimiques peuvent attaquer les modules à LED et entraîner une baisse du flux lumineux, une dérive de la température de couleur voire une panne totale. Toujours éviter le contact direct avec les acides, les lessives alcalines, les solvants, les composés et huiles organiques volatils. Assurer une ventilation et une aération suffi-santes pour éviter les dégâts dus aux dégagements de gaz.
- Pour éviter les problèmes de CEM, ne pas poser le câblage de liaison directement à côté du câblage du luminaire.
- Brancher les entrées de commande des luminaires à gradation à l'aide de câbles standard adaptés à la tension secteur.

### Modification de nos produits
La modification, la transformation et la modification de marquage des produits peuvent avoir une influence négative sur leurs propriétés techniques, détériorer les produits et causer des dommages indirects sur d'autres objets. Le fabricant ne saurait être tenu responsable des dommages causés par ces modifications.

+ IP5x - non conductrice de la poussière
+ IP6x - poussière conductrice et de la poussière non conductrice

## Information für Wartung, Reinigung und Entsorgung von LED-Leuchten
## Information for service, cleaning and disposal of luminaire

### Instruktion für Wartung von Leuchten:
### Instruction for luminaire service:

| Ersetzen von alten oder ausgefallenen LED | Instruktion für Ende der Lebensdauer: Instruction for end of life: | Ausschalten, Stromzufuhr zur Leuchte unterbrechen | Batterie entfernen zur Entsorgung | Leuchte entfernen zur Entsorgung | Das Material an WEEE Entsorgungsstelle liefern |
|---|---|---|---|---|---|
| Replace aged or failed LED | | Switch off, switch off suply to luminaire | Remove battery for disposal | Remove luminair for disposal | Dispatch materials to WEEE recycling plant |

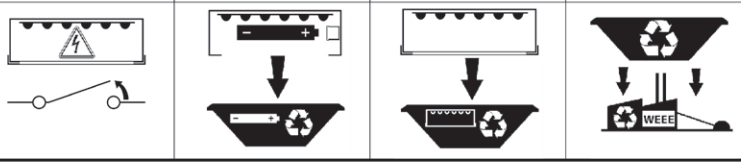


### Instruktion für Reinigung von Leuchten:
### Instruction for luminaire cleaning

| Leuchte reinigen | Ausschalten, Stromzufuhr zur Leuchte unterbrechen | Leuchte außen reinigen | Nur bei SELV! Only SELV! Optik entfernen | Leuchte innen reinigen | Optik wieder anbringen | Funktionstest durchführen |
|---|---|---|---|---|---|---|
| Clean luminaire | Switch off, switch off suply to luminaire | Clean outside luminaire | Remove optic | Clean inside luminaire | Refit optic | Make funktional test |

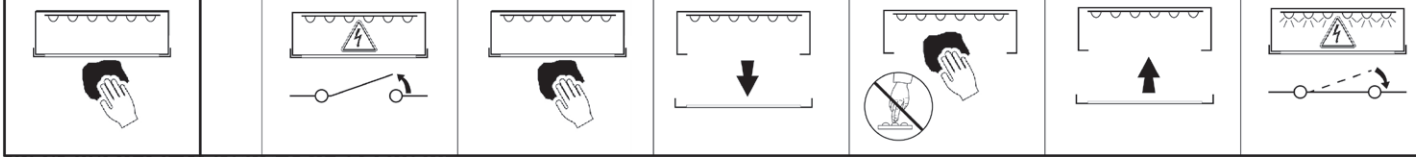

Art-Nr: 532348-11/20

# LED

E

## Advertencias de seguridad

### Advertencias de seguridad generales
- El montaje, la puesta en funcionamiento y el mantenimiento deberán ser realizados exclusivamente por electricistas profesionales.
- No realice nunca trabajos en la luminaria cuando esta esté sometida a tensión. ¡Peligro de muerte por descarga eléctrica!
- La conexión eléctrica se debe realizar de modo reglamentario, de conformidad con todas las normas vigentes y con las demás prescripciones nacionales e internacionales de seguridad y prevención de accidentes.
- No se autoriza el uso de luminarias dañadas.
- Tenga en cuenta las advertencias de seguridad y las instrucciones de montaje y conserve los documentos correspondientes como referencia.
- No se asume ninguna responsabilidad por daños debidos a un uso antirreglamentario.
- Al hacer reparaciones, utilice exclusivamente piezas originales.
- Asegúrese de que el techo y los elementos de fijación tengan la capacidad de carga suficiente.
- A menos que se describa lo contrario etiquetando la luminaria, la luminaria es apta exclusivamente para su uso en interiores y a una temperatura ambiente de hasta 25 °C.

### Funcionamiento de la luminaria
- La aparición de puntos oscuros inusuales puede ser indicio de la avería de algunos ledes. Realice revisiones periódicas y sustituya las luminarias defectuosas.
- El rebase de la temperatura ambiente permitida conlleva una reducción de la vida útil de la luminaria y, en casos extremos, el riesgo de una avería prematura.
- Se debe evitar la condensación en la luminaria.
- Está prohibida toda carga mecánica sobre las pletinas de los ledes.
- Una descarga electrostática podría provocar daños en los ledes e incluso una avería total. Se deberá evitar siempre el contacto directo con estos.
- Según su grado de concentración, los productos químicos pueden atacar los módulos de ledes y provocar una reducción del flujo luminoso, alteraciones en el tono de la luz o una avería total. Se debe evitar bajo cualquier circunstancia el contacto directo con ácidos, lejías, disolventes, compuestos orgánicos volátiles o aceites. Para evitar daños debidos a las emisiones de gas, es necesario garantizar una ventilación suficiente de entrada y salida.
- Para evitar problemas de compatibilidad electromagnética, no tienda los cables de paso junto a los cables de la luminaria.
- Conecte las entradas de mando de luminarias atenuables mediante cables convencionales adecuados para tensión de red.

### Modificaciones de nuestros productos
La modificación, la reelaboración y el remarcado de los productos pueden influir negativamente en sus propiedades técnicas, destruirlos y, posiblemente, causar los consiguientes daños a otros objetos. El fabricante no se hace responsable de los daños causados por dichas modificaciones.

+ IP5x - polvo no conductor
+ IP6x - polvo conductor y no conductor

I

## Avvertenze sulla sicurezza

### Avvertenze generali sulla sicurezza
- Il montaggio, l'impiego e la manutenzione devono essere eseguiti solo da un elettricista specializzato.
- Non lavorare mai sulla lampada con tensione elettrica inserita. Pericolo di morte a causa di scossa elettrica!
- L'allacciamento elettrico deve essere eseguito a regola d'arte, in conformità a tutte le norme vigenti, alle disposizioni nazionali e internazionali di sicurezza e alle normative antinfortunistiche.
- Le lampade danneggiate non devono essere utilizzate ulteriormente.
- Osservare e conservare le avvertenze di sicurezza e le istruzioni di montaggio.
- Non ci assumiamo alcuna responsabilità per eventuali danni dovuti a un impiego non appropriato.
- Per le riparazioni utilizzare solo parti di ricambio originali.
- Verificare la portata del soffitto e degli elementi di fissaggio.
- La lampada è prevista solo per uso interno e temperature ambiente fino a 25°C, se non diversamente descritto dall'etichettatura dell'apparecchio.

### Funzionamento della lampada
- Punti scuri insoliti possono indicare un guasto parziale dei LED. Controllare regolarmente e sostituire le lampade in questione.
- Il superamento della temperatura ambiente consentita riduce la durata utile della lampada, in casi estremi si rischia un guasto precoce.
- Evitare la condensazione della lampada.
- È vietata qualsiasi sollecitazione meccanica delle schede LED.
- I LED possono essere danneggiati dalle scariche elettrostatiche (ESD), con possibilità di guasto totale. Si deve sempre evitare il contatto diretto.
- In rapporto alla loro concentrazione, le sostanze chimiche possono aggredire i moduli LED provocando la riduzione del flusso luminoso, la deriva del colore della luce o un guasto totale. Si deve sempre evitare il contatto diretto con acidi, basi, solventi, composti organici volatili o oli. Per evitare danni da emissioni di gas, si deve garantire una sufficiente ventilazione e disaerazione.
- Per evitare problemi di CEM, il cablaggio di transito non deve essere posato direttamente insieme al cablaggio della lampada.
- Collegare gli ingressi di comando delle lampade dimmerabili (varialuce).
- usando dei cavi adeguati per la tensione di rete.

### Modificaciones de nuestros productos
Modifiche, conversioni, cambi dell'etichettatura apportati ai prodotti possono influenzare negativamente le loro proprietà tecniche, distruggerli ed eventualmente causare danni ad altri oggetti. Il produttore non può essere ritenuto responsabile di eventuali danni causati da tali modifiche.

+ IP5x - polvere non conduttiva
+ IP6x - polvere conduttiva e non conduttiva

PL

## Zasady bezpieczeństwa

### Ogólne zasady bezpieczeństwa
- Prace związane z montażem, uruchomieniem i konserwacją może wykonywać tylko elektryk.
- Nigdy nie wykonywać prac przy oprawie, gdy znajduje się ona pod napięciem. Niebezpieczeństwo dla życia z powodu porażenia prądem!
- Przyłącze elektryczne musi być wykonane profesjonalnie, zgodnie ze wszystkimi obowiązującymi normami oraz innymi krajowymi i międzynarodowymi przepisami bezpieczeństwa i zapobiegania wypadkom.
- Nie wolno używać uszkodzonych opraw.
- Przestrzegać zasad bezpieczeństwa i wytycznych instrukcji montażu oraz zachować je do późniejszego użytku.
- Producent nie ponosi odpowiedzialności za nieprawidłowe stosowanie.
- W przypadku naprawy używać tylko oryginalnych części.
- Zapewnić nośność sufitu i elementów mocujących.
- Oprawa przeznaczona jest wyłącznie do stosowania w pomieszczeniach w temperaturach otoczenia do 25°C, o ile nie opisano inaczej, oznaczając oprawę.

### Eksploatacja oprawy
- Nietypowe zaciemnione miejsca mogą wskazywać na częściową awarię oprawy LED. Należy regularnie dokonywać kontroli i wymieniać uszkodzone oprawy,
- Przekroczenie dopuszczalnej temperatury otoczenia skraca trwałość oprawy, w skrajnym przypadku grozi przedwczesną awarią.
- Unikać obroszenia oprawy.
- Niedopuszczalne jest jakiekolwiek obciążenie mechaniczne płytek LED.
- Diody LED mogą ulec uszkodzeniu wskutek wyładowania elektrostatycznego (ESD), a nawet ulec całkowitej awarii. Zawsze należy unikać ezpośredniego kontaktu.
- W zależności od stężenia chemikalia mogą uszkodzić moduły LED i prowadzić do obniżenia strumienia światła, zmiany barwy światła lub całkowitej awarii. Zawsze należy unikać bezpośredniego kontaktu z kwasami, ługami, rozpuszczalnikami, lotnymi związkami organicznymi lub olejami. Celem uniknięcia szkód z powodu emisji gazów należy zapewnić odpowiednią wentylację i odpowietrzanie.
- Aby uniknąć problemów EMC, nie prowadzić okablowania przelotowego bezpośrednio wzdłuż okablowania oprawy.
- Wejścia sterujące opraw z funkcją ściemniania podłączać za pomocą dostępnych powszechnie w sprzedaży przewodów odpowiednich od napięcia sieciowego.

### Zmiany naszych produktów
Zmiany, przeróbki, modyfikacja oznaczeń produktów mogą mieć negatywny wpływ na ich parametry techniczne, spowodować ich awarię, a także być możliwą przyczyną powstania szkód następczych w innych obiektach. Producent nie odpowiada za szkody spowodowane tego typu modyfikacjami.

+ IP5x - pył nieprzewodzący
+ IP6x - pył przewodzący i nieprzewodzący

BG — Инструкциите за безопасност на вашия национален език можете да намерите в Интернет на: doc.regiolux.de/safety_BG.pdf

DK — Sikkerhedsinstruktionerne på dit lands sprog findes på Internettet på: doc.regiolux.de/safety_DK.pdf

EST — Riikliku keele ohutusjuhiseid leiab Internetist aadressil: doc.regiolux.de/safety_EST.pdf

HR — Sigurnosne upute na vašem nacionalnom jeziku mogu se naći na Internetu na: doc.regiolux.de/safety_HR.pdf

LV — Drošības norādījumus savā valsts valodā var atrast internetā: doc.regiolux.de/safety_LV.pdf

LT — Saugos nurodymus savo valstybine kalba galima rasti internete adresu: doc.regiolux.de/safety_LT.pdf

N — Sikkerhetsinstruksjonene på ditt nasjonalspråk finnes på Internett på: doc.regiolux.de/safety_N.pdf

P — As instruções de segurança em sua língua nacional podem ser encontradas na Internet em: doc.regiolux.de/safety_PL.pdf

RO — Instrucțiunile de siguranță din limba dvs. națională pot fi găsite pe Internet la: doc.regiolux.de/safety_RO.pdf

S — Säkerhetsanvisningarna på ditt nationella språk finns på Internet på: doc.regiolux.de/safety_de_S.pdf

SK — Bezpečnostné pokyny vo vašom národnom jazyku nájdete na internetovej adrese: doc.regiolux.de/safety_de_SK.pdf

SLO — Varnostna navodila v vašem nacionalnem jeziku so na voljo na spletni strani: doc.regiolux.de/safety_de_SLO.pdf

CZ — Bezpečnostní pokyny ve vašem národním jazyce naleznete na adrese: doc.regiolux.de/safety_CZ.pdf

TR — Ulusal dilinizdeki güvenlik talimatları internette şu adreste bulunabilir: doc.regiolux.de/safety_TR.pdf

H — A nemzeti nyelvű biztonsági utasítások megtalálhatók az interneten: doc.regiolux.de/safety_H.pdf

CY GR — Οι οδηγίες ασφάλειας στην εθνική σας γλώσσα διατίθενται στο διαδίκτυο στη διεύθυνση: doc.regiolux.de/safety_CY_GR.pdf

Art-Nr: 532348-11/20